CPE SYSTEMS INC

C114 EX

TECHNICAL SPECIFICATIONS

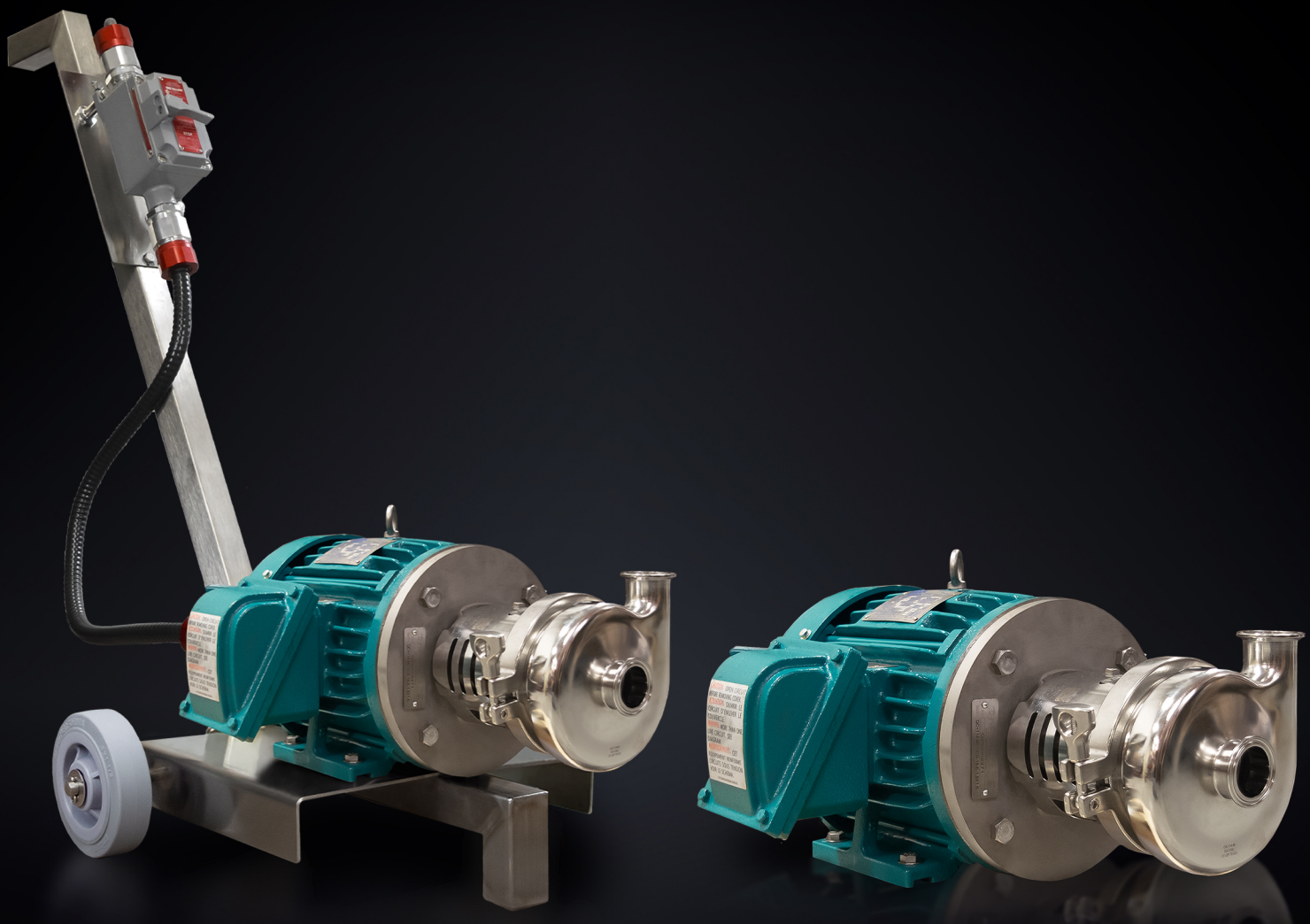

SALES@CPESYSTEMS.COM | WWW.CPESYSTEMS.COM | +1 (800) 668-2268

The C114 is a close-coupled C-series centrifugal pump for small to medium applications, designed for transferring flammable liquids in the distilling, ethanol processing, beverage, and herbal extraction industries. It is built on the industry standard C-series design, with parts that are easy to replace and interchangeable with most major brands of C-series pumps. It is attached to a premium efficiency explosion proof motor, UL/CSA approved for Class I Groups C & D and Class II Groups E, F & G, T3B, making it suitable for high-proof alcohol, ethanol, and other flammable liquids.

DESIGN

The C114 is the original C-series centrifugal pump, with a single external mechanical seal and 316L stainless steel product contact parts. It handles liquids with entrained vapours as well as flammable products, and all three seal options allow full CIP service without dismantling.

FEATURES

- 1 ½" x 1 ½" Tri-Clamp connections
- Premium efficiency explosion proof motor, NEMA C-face
- 4" maximum impeller diameter
- CIP compatible without dismantling

SEALS

There are three seal types available for the C114:

- **D Seal**: Single mechanical external seal
- **DG Seal**: D seal with a replaceable silicon carbide seat
- **F Seal**: Single mechanical external seal with water cascade

HORSEPOWER

Horsepower	Max. Flow Rate	Shut Off Head
1.5 HP	100 GPM	60 ft
2 HP	125 GPM	65 ft
3 HP	150 GPM	75 ft

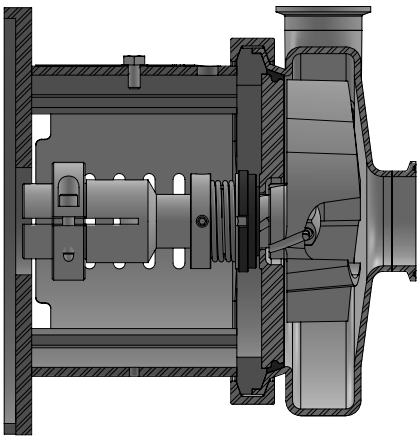



TECHNICAL SPECIFICATIONS

Materials	
Parts in Contact With Product:	316L Stainless Steel
Other Steel Parts:	304 Stainless Steel
Gaskets in Contact With Product:	EPDM (standard) Buna or Viton (special order)
Weight Without Motor:	12 lbs
Mechanical Seal	
Rotary Seal:	Carbon (standard) Silicon Carbide (special order)
Stationary Seal:	Stainless Steel (standard) Ceramic/Silicon Carbide (special order)
External Surface Finish:	Bright Polish
Internal Surface Finish:	32 RA
Connection Type:	Tri-Clamp
Connection Size:	1.5" x 1.5" (standard) 2" x 1.5" (special order)
Max. Impeller Diameter:	4"
Motor	
Type:	Premium Efficiency Explosion Proof
Motor Frame Size:	NEMA 143TC to 182TC C-Face
Speed:	3450 RPM
Operating Limits	
Nominal Pressure:	8 bar (117 PSI)
Temperature Range:	14°F (-10°C) to 248°F (120°C)
Maximum Flow:	150 GPM (34 m^3/h)
Maximum Differential Head:	75 ft (23 m)
Maximum Speed:	3500 RPM (60 Hz)
Viscosity:	600 cP
Approvals	
Certification:	3A Authorization #1537, 02-11 (centrifugal pumps) for CIP
Motor Approval:	UL/CSA approved for Class I Groups C & D, Class II Groups E, F & G, T3B

Assemblies

The C114 is available as a pump and motor or as a portable pump assembly. The portable pump assembly includes an explosion-proof switch, cart, and cord. Both versions use an explosion-proof motor suitable for hazardous locations. Assemblies are supplied without a plug.

PORTABLE ASSEMBLY COMPONENTS:

- C114 Pump Head
- Premium Efficiency Explosion Proof Motor
- Killark Explosion Proof Shut-Off Switch with NEMA 7/9 Enclosure
- Stainless Steel Pump Cart
- Electrical Cord (Plug Not Included)

PUMP AND MOTOR COMPONENTS:

- C114 Pump Head
- Premium Efficiency Explosion Proof Motor

Motor



PREMIUM EFFICIENCY EXPLOSION PROOF MOTOR:

- Cast Iron Construction
- NEMA C-Face, Mounted With Feet
- UL/CSA Approved Class I Groups C & D, Class II Groups E, F & G, T3B
- IP55 Rated
- Class F Insulation
- Thermostats Fitted as Standard
- Sealed Ball Bearings
- Stainless Steel Nameplate
- Encapsulated Windings
- Stainless Steel Shaft and Key

Portable Assembly Options

Horsepower	Available Motor	Cart	Switch	Available Voltages
1.5 HP	Premium Efficiency Explosion Proof Motor	Knockdown Pump Cart	Killark XSD	230 volt three phase 460 volt three phase 575 volt three phase 115 volt single phase (special order) 230 volt single phase (special order)
2 HP	Premium Efficiency Explosion Proof Motor	Knockdown Pump Cart	Killark XSD	230 volt three phase 460 volt three phase 575 volt three phase
3 HP	Premium Efficiency Explosion Proof Motor	Medium Duty Cart	Killark B7MS	230 volt three phase 460 volt three phase 575 volt three phase

The explosion-proof portable assemblies come with a Killark explosion-proof motor starter switch, rated for Class I Groups C & D and Class II Groups E, F & G hazardous locations. The switch allows for safe and easy control of the pump.

XSD Manual Motor Starter

Built for explosion-proof portable pump assemblies of 2 HP and lower, the Killark XSD Series is an explosion-proof manual motor starting switch. It provides manual starting and stopping, with motor running protection when separate overload heaters are used. The enclosure is cast copper-free aluminum alloy with a stainless steel operating shaft, and the switch can be padlocked in either the on or off position.

Poles:	3-pole
Enclosure rating:	NEMA 7 (C, D), 9 (E, F, G)
Enclosure material:	Cast copper-free aluminum alloy
Operating shaft:	Stainless steel
Approvals:	FM approved (File 25219); Listed (File E53360 and/or E12379); CSA Certified (File LR11714)

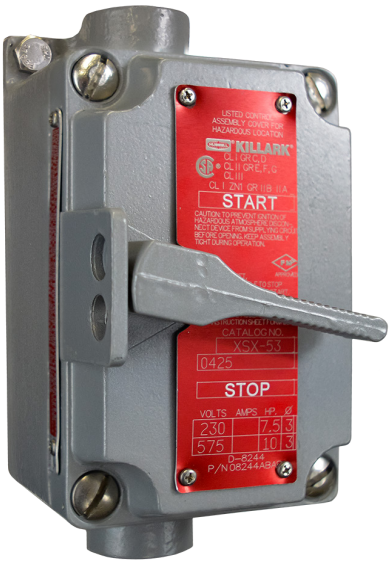

B7MS Motor Starter



Built for the 3 HP explosion-proof portable pump assembly, the Killark B7MS Series is a compact, push-button explosion-proof motor starter. It is Type 3, 4, and 4X rated for protection from rain, hose-directed water, and corrosion. The enclosure is copper-free aluminum with 316 stainless steel cover bolts and a silicone O-ring gasket, and the switch includes overload protection and a lock-out provision.

Operator style:	Push button
Enclosure rating:	Type 3, 4, 4X
Enclosure material:	Copper-free aluminum
Cover bolts:	316 stainless steel
O-ring gasket:	Silicone
Ambient temperature:	-25°C to +40°C (CSAus); -50°C to +40°C (cCSA)
Approvals:	CSA Certificate LR11714

Pump Carts

The explosion proof portable assembly is mounted on a stainless steel pump cart. Each cart is sized to the motor horsepower, with larger motors mounted on heavier duty carts. All pump carts have non-marring wheels.

Knockdown Pump Cart



Custom designed for the craft food and beverage industry, this is the smallest pump cart, built for pumps up to 2 HP. This cart is aerodynamic, tilt draining, manoeuvrable, and has a small footprint. The knockdown cart handle is removable, creating a compact cart that can be easily stored or wheeled into tight spaces. All parts are hand welded in Canada for quality assurance and durability.

Frame:	16 ga stainless steel square tube with foot
Handle:	16 ga stainless steel square tube
Platform:	14 ga stainless steel AISI 304
	Pre-drilled to fit 56 and 143 NEMA frames
Axle:	½" stainless steel rod axle
Wheels:	2" x 5" non-marking neoprene wheels

Medium Duty Cart



Custom designed for the craft food and beverage industry, this is a medium duty pump cart, built for pumps up to 3 HP. This cart is aerodynamic, tilt draining, maneuverable, and has a small footprint. All parts are hand welded in Canada for quality assurance and durability. Motors 5 HP and higher are mounted on a 4-wheel heavy duty cart.

Frame:	16 ga stainless steel round tube with foot
Handle:	16 ga stainless steel round tube
Platform:	11 ga stainless steel AISI 304
	Pre-drilled to fit 184 and 213 NEMA frames
Axle:	½" stainless steel rod axle
Wheels:	8" Duraflex rubber wheels

Capacity Curves

MODEL: C114

Frequency: 60 Hz

RPM: 3600

Size: 1.5” x 1.5” x 4”

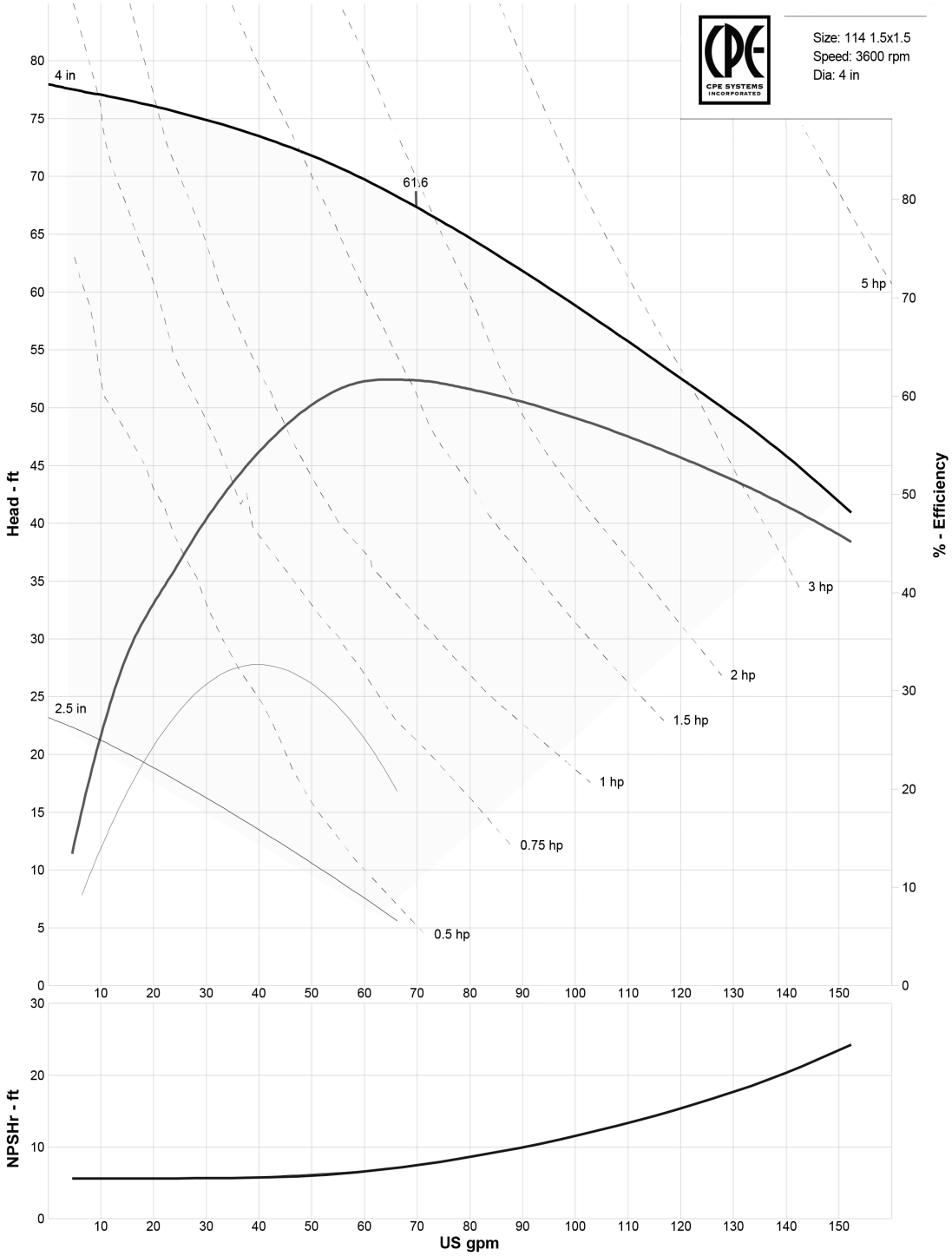

Viscosity and Specific Gravity Table

Product	Specific Gravity	Viscosity
Acetic Acid		
5%	1.01	
10%	1.01	31.7 SSU @ 59°F
50%	1.06	33.0 SSU @ 59°F
80%	1.08	35.0 SSU @ 59°F
Animal Fat	0.9	130 SSU @ 115°F
		50 SSU @ 200°F
Barbecue Sauce	1.05	11,500 SSU @ 40-75°F
Beer	1.02	32 SSU @ 68°F
Blood - Animal	0.93-0.98	15,000 SSU @ 55°F
Butter	0.93-0.98	15,000 SSU @ 55°F
		440 SSU @ 90°F
		220 SSU @ 115°F
Coconut Oil	0.92	125 SSU @ 106°F
Corn Oil	0.92	135 SSU @ 130°F
		54 SSU @ 212°F
Corn Starch Solutions		
22 Baume	1.18	150 SSU @ 70°F
		130 SSU @ 100°F
24 Baume	1.2	600 SSU @ 70°F
		440 SSU @ 100°F
25 Baume	1.21	1400 SSU @ 70°F
		800 SSU @ 100°F
Cottage Cheese	1.02	4,300 SSU
Cream (sweet)	1	73 SSU
	0.99	140 SSU
	0.99	215 SSU
Egg Yolk	1.12	21,500 SSU @ 35°F
Gelatin	1.01	1,380-2,580 SSU @ 160°F
Glucose	1.35 - 1.44	35M-100M SSU @ 100°F
		4M-11M SSU @ 150°F
Honey	1.3	1250-1425 SSU @ 100°F
Ice Cream Mix	1.15	1050 SSU @ 46°F
Lard	0.96	287 SSU @ 100°F
Linseed Oil	0.92 - 0.94	143 SSU @ 100°F
		93 SSU @ 130°F
Malt Syrup	1.41	85,400 SSU @ 77°F
Maple Syrup	1.37	2,000 SSU @ 68°F
Margarine	0.93	13,900 SSU @ 84°F
Milk	1.02 - 1.05	31.5 SSU @ 68°F
Molasses		
A. First	1.4 - 1.46	1,300 - 23,500 SSU @ 100°F
		700 - 8,160 SSU @ 130°F
B. Second	1.43 - 1.48	6,536 - 61,180 SSU @ 100°F
		3058 - 15,294 SSU @ 130°F
C. Blackstrap	1.46 - 1.49	12,190 - 23,500 SSU @ 100°F
Mustard	1	17,000 SSU @ 85°F
Olive Oil	0.91 - 0.92	200 SSU @ 100°F
Peanut Butter	1.2	77,400 SSU @ 110-140°F
Sesame Seed Oil	0.92	184 SSU @ 100°F
		110 SSU @ 130°F
Soy Bean Oil	0.91	500 SSU @ 44°F
Tomato Paste	1.14	60M-80M SSU
		21M SSU Approx.
Water	1	31 SSU @ 68°F

C114 with Set Screw

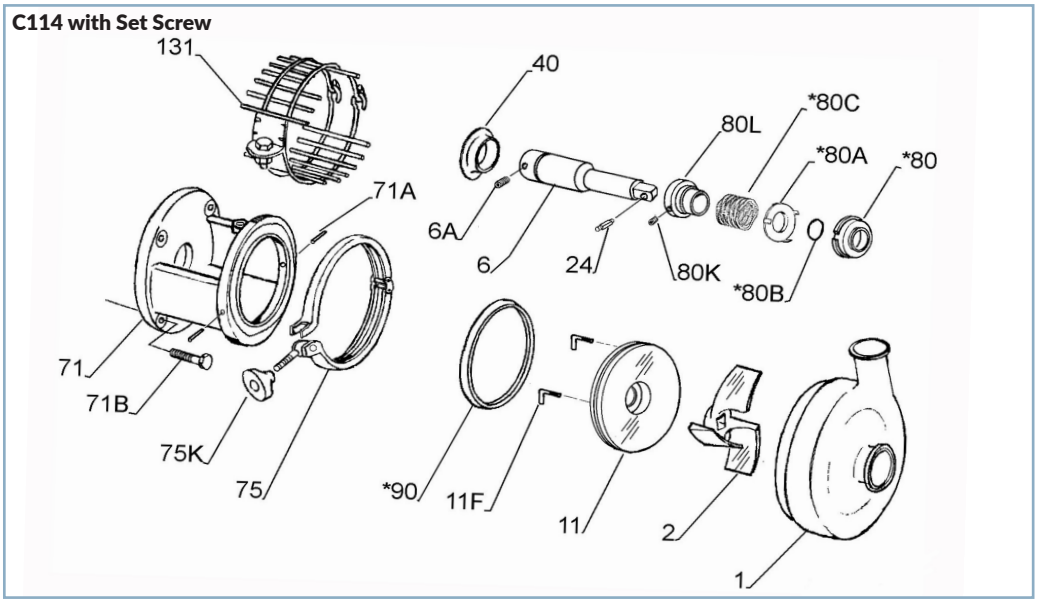

C114 with Shaft Collar

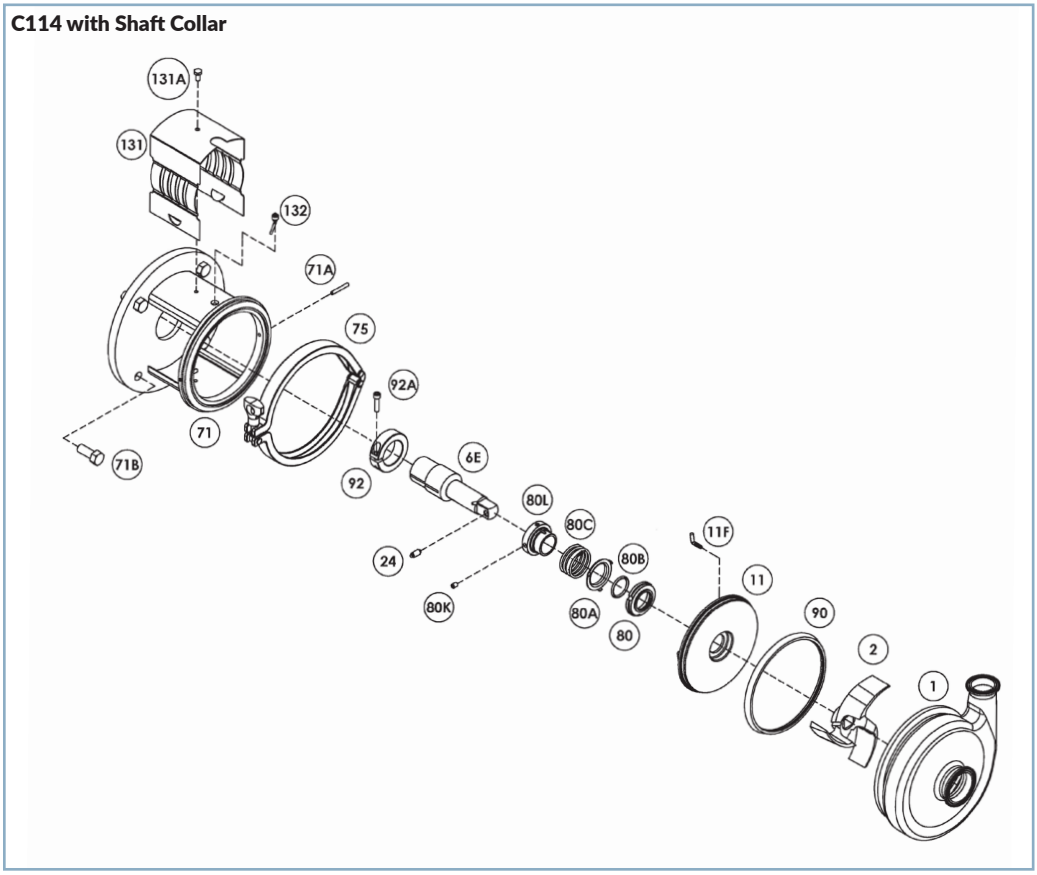

Part #	Part Name
1.	Casing
2.	Impeller
11.	Backplate
11F.	Backplate Pin
*90.	Casing Gasket
75.	Tri-Clamp
75K.	Wingnut
71B.	Adapter Mounting Screws
71.	Adapter
*80.	Carbon Seal
*80A.	Cup
*80B.	O-ring Seal
*80C.	Spring
80K.	Drive Collar Screw
80L.	Drive Collar
24.	Impeller Retainer
6.	Shaft
6E.	Shaft
6A.	Set Screw
40.	Deflector
92.	Shaft Collar
92A.	Shaft Collar Screw
131.	Seal Guard Assembly

* These items are included in the CPE Ultimate Seal Kit