CPE SYSTEMS INC

CB+216 EX

TECHNICAL SPECIFICATIONS



SALES@CPESYSTEMS.COM | WWW.CPESYSTEMS.COM | +1 (800) 668-2268

CB+216

The CB+ explosion proof pump is a re-designed C-series centrifugal pump with an internal mechanical seal, paired with a premium efficiency explosion proof motor, UL/CSA approved for Class I Groups C & D and Class II Groups E, F & G, T3B, making it suitable for high-proof alcohol, ethanol, and other flammable liquids. It maintains the reliability and durability of the C-series pump, while adding the advantages of an internal seal. This seal allows for the product to lubricate the seal fully during use and for the clean-in-place (CIP) process to completely sanitize the seal. This pump is designed for medium sized applications.



DESIGN

The internal seal allows for easy cleaning, prevents pooling on the seal, and permits greater seal pressure with less leaking. The High-Clean cartridge seal is encased, making it more sanitary and less prone to breakage than the standard style. The CB+216 features the same collar and threaded impeller nut as the C+ pump. The collar clamps down evenly on all sides of the drive shaft, preventing the minor wobble that can occur from set screwed shafts. The threaded impeller nut fully secures the impeller in place, replacing the impeller pin of the C-series. Two specialized gaskets seal the shaft and allow a CIP procedure to clean behind the impeller.

FEATURES

- 2” X 1 ½” Tri-Clamp connections
- 304 stainless steel adapter
- Internal mechanical seal
- Premium efficiency explosion proof motor, NEMA C-face

HORSEPOWER

Horsepower	Max. Flow Rate	Shut Off Head
1.5 HP	110 GPM	35 ft
2 HP	130 GPM	40 ft
3 HP	100 GPM	110 ft
5 HP	170 GPM	150 ft
7.5 HP	210 GPM	160 ft
10 HP	240 GPM	160 ft
15 HP	270 GPM	160 ft

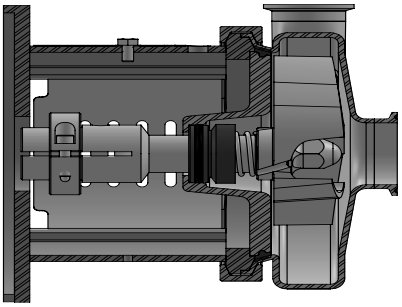

TECHNICAL SPECIFICATIONS

Materials	
Parts in Contact With Product:	316L Stainless Steel
Other Steel Parts:	304 Stainless Steel
Gaskets in Contact With Product:	EPDM (standard) Viton (special order)
Weight Without Motor:	22 lbs
Mechanical Seal	
Rotary Seal:	Carbon (standard) Silicon Carbide (special order)
Stationary Seal:	Silicon Carbide
External Surface Finish:	Bright Polish
Internal Surface Finish:	32 RA
Connection Type:	Tri-Clamp
Connection Size:	2” x 1.5”
Max. Impeller Diameter:	6”
Motor	
Type:	Premium Efficiency Explosion Proof
Motor Frame Size:	NEMA 14T to 25T C-Face
Speeds:	1750 & 3450 RPM
Operating Limits	
Nominal Pressure:	8 bar (117 PSI)
Temperature Range:	14°F (-10°C) to 248°F (120°C)
Maximum Flow:	275 GPM (62.5 m^3/h)
Maximum Differential Head:	160 ft (49 m)
Maximum Speed:	3500 RPM (60 Hz)
Viscosity:	600 cP
Approvals	
Certification:	3-A Authorization #1004, 02-11 (centrifugal pumps) for CIP
Motor Approval:	UL/CSA approved for Class I Groups C & D, Class II Groups E, F & G, T3B

Assemblies

The CB+216 is available as a pump and motor or as a portable pump assembly. The portable pump assembly includes an explosion-proof switch, cart, and cord. Both versions use an explosion-proof motor suitable for hazardous locations. Assemblies are supplied without a plug.

PORTABLE ASSEMBLY COMPONENTS:

- CB+216 Pump Head
- Premium Efficiency Explosion Proof Motor
- Killark Explosion Proof Shut-Off Switch with NEMA 7/9 Enclosure
- Stainless Steel Pump Cart
- Electrical Cord (Plug Not Included)

PUMP AND MOTOR COMPONENTS:

- CB+216 Pump Head
- Premium Efficiency Explosion Proof Motor

Motor



PREMIUM EFFICIENCY EXPLOSION PROOF MOTOR:

- Cast Iron Construction
- NEMA C-Face, Mounted With Feet
- UL/CSA Approved Class I Groups C & D, Class II Groups E, F & G, T3B
- IP55 Rated
- Class F Insulation
- Thermostats Fitted as Standard
- Sealed Ball Bearings
- Stainless Steel Nameplate
- Encapsulated Windings
- Stainless Steel Shaft and Key

Portable Assembly Options*

Horsepower	Available Motor	Cart	Switch	Available Voltages
1.5 HP	Premium Efficiency Explosion Proof Motor	Knockdown Pump Cart	Killark XSD	230 volt three phase 460 volt three phase 575 volt three phase
2 HP	Premium Efficiency Explosion Proof Motor	Knockdown Pump Cart	Killark XSD	230 volt three phase 460 volt three phase 575 volt three phase
3 HP	Premium Efficiency Explosion Proof Motor	Medium Duty Cart	Killark B7MS	230 volt three phase 460 volt three phase 575 volt three phase
5 HP	Premium Efficiency Explosion Proof Motor	Heavy Duty Cart	Killark B7MS	230 volt three phase 460 volt three phase 575 volt three phase
7.5 HP	Premium Efficiency Explosion Proof Motor	Heavy Duty Cart	Killark B7MS	230 volt three phase 460 volt three phase 575 volt three phase
10 HP	Premium Efficiency Explosion Proof Motor	Heavy Duty Cart	Killark B7MS	230 volt three phase 460 volt three phase 575 volt three phase
15 HP	Premium Efficiency Explosion Proof Motor	Super Heavy Duty Cart	Killark B7MS	460 volt three phase 575 volt three phase

*Higher horsepowers and other voltages are available by special order.

On/Off Switches

The explosion-proof portable assemblies come with a Killark explosion-proof motor starter switch, rated for Class I Groups C & D and Class II Groups E, F & G hazardous locations. The switch allows for safe and easy control of the pump.

XSD Manual Motor Starter

Built for explosion-proof portable pump assemblies of 2 HP and lower, the Killark XSD Series is an explosion-proof manual motor starting switch. It provides manual starting and stopping, with motor running protection when separate overload heaters are used. The enclosure is cast copper-free aluminum alloy with a stainless steel operating shaft, and the switch can be padlocked in either the on or off position.

Poles:	3-pole
Enclosure rating:	NEMA 7 (C, D), 9 (E, F, G)
Enclosure material:	Cast copper-free aluminum alloy
Operating shaft:	Stainless steel
Approvals:	FM approved (File 25219); Listed (File E53360 and/or E12379); CSA Certified (File LR11714)

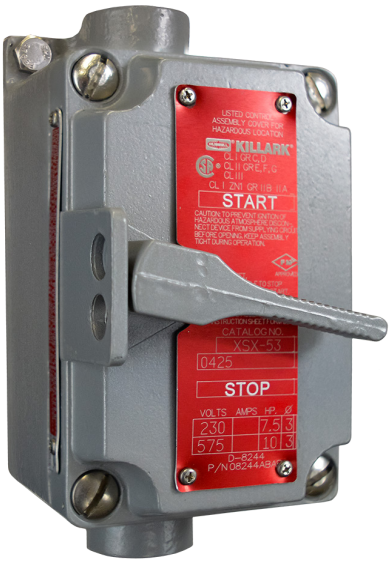

B7MS Motor Starter



Built for the 3 HP to 15 HP explosion-proof portable pump assemblies, the Killark B7MS Series is a compact, push-button explosion-proof motor starter. It is Type 3, 4, and 4X rated for protection from rain, hose-directed water, and corrosion. The enclosure is copper-free aluminum with 316 stainless steel cover bolts and a silicone O-ring gasket, and the switch includes overload protection and a lock-out provision.

Operator style:	Push button
Enclosure rating:	Type 3, 4, 4X
Enclosure material:	Copper-free aluminum
Cover bolts:	316 stainless steel
O-ring gasket:	Silicone
Ambient temperature:	-25°C to +40°C (CSAus); -50°C to +40°C (cCSA)
Approvals	CSA Certificate LR11714

Pump Carts

The explosion proof portable assembly is mounted on a stainless steel pump cart. Each cart is sized to the motor horsepower, with larger motors mounted on heavier duty carts. All pump carts have non-marring wheels.

Knockdown Pump Cart



Custom designed for the craft food and beverage industry, this is the smallest pump cart, built for pumps up to 2 HP. This cart is aerodynamic, tilt draining, maneuverable, and has a small footprint. The knockdown cart handle is removable, creating a compact cart that can be easily stored or wheeled into tight spaces. All parts are hand welded in Canada for quality assurance and durability.

Frame:	16 ga stainless steel square tube with foot
Handle:	16 ga stainless steel square tube
Platform:	14 ga stainless steel AISI 304
	Pre-drilled to fit 56 and 143 NEMA frames
Axle:	½" stainless steel rod axle
Wheels:	2" x 5" non-marking neoprene wheels

Medium Duty Cart



Custom designed for the craft food and beverage industry, this is a medium duty pump cart, built for pumps up to 3 HP. This cart is aerodynamic, tilt draining, maneuverable, and has a small footprint. All parts are hand welded in Canada for quality assurance and durability. Motors 5 HP to 10 HP are mounted on a 4-wheel heavy duty cart.

Frame:	16 ga stainless steel round tube with foot
Handle:	16 ga stainless steel round tube
Platform:	11 ga stainless steel AISI 304
	Pre-drilled to fit 184 and 213 NEMA frames
Axle:	½" stainless steel rod axle
Wheels:	8" Duraflex rubber wheels

Heavy Duty Cart



Custom designed for the craft food and beverage industry, this is a heavy duty pump cart, built for pumps 5 to 10 HP. This cart is constructed of stainless steel and has foam filled tires. It is designed to be sturdy and reliable. All parts are hand welded in Canada for quality assurance and durability.

Frame:	1½" 16 ga stainless steel tube frame
Handle:	16 ga stainless steel square tube
Platform:	14 ga stainless steel AISI 304
	Fits 213TC frames and larger
Axle:	½" stainless steel rod axle
Wheels:	8" foam filled tires, non-rusting

Super Heavy Duty Cart



This 4-wheeled stainless steel pump cart is Canadian-made and designed for large-scale sanitary processors, including food and beverage manufacturing plants. This cart is designed for pumps between 15 and 20 HP. The wheels are set closer together, the base is larger, and the handle has been reimagined to allow for easy maneuverability of large pumps. The polished stainless steel pad is sized to fit 213TC and larger NEMA frame motors up to 15 HP and for larger pumps with gear motors.

Frame:	1½" 16 ga stainless steel tube frame
Handle:	16 ga stainless steel round tube
Platform:	Polished stainless steel
	Fits 213TC frames and larger, up to 15 HP (and larger pumps with gear motors)
Axle:	½" stainless steel rod axle
Wheels:	8" foam filled tires, non-rusting

Capacity Curves

MODEL: CB+216

Frequency: 60 Hz

RPM: 1750

Size: 2” x 1.5” x 6”

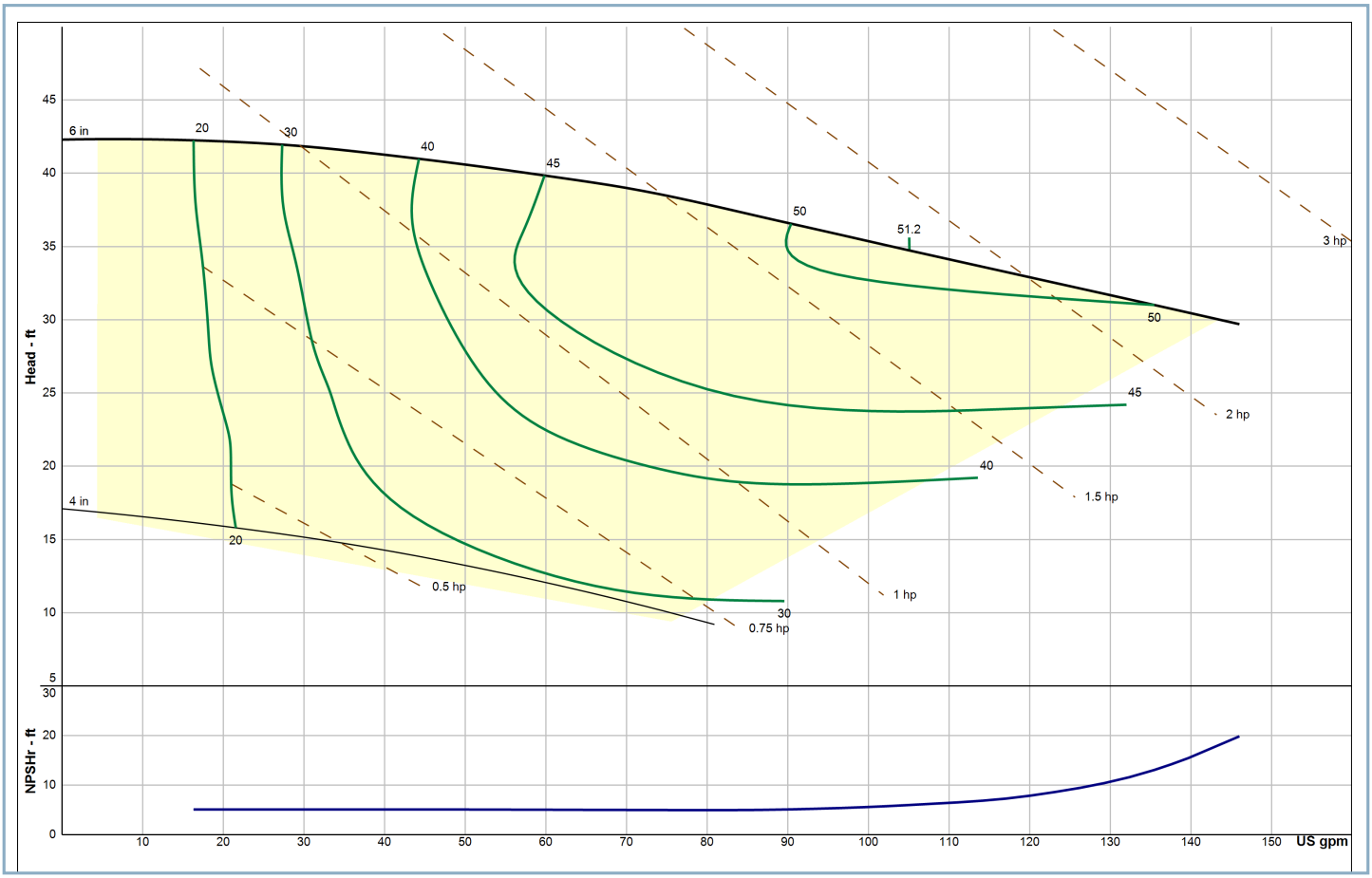

Capacity Curves

MODEL: CB+216

Frequency: 60 Hz

RPM: 3500

Size: 2” x 1.5” x 6”

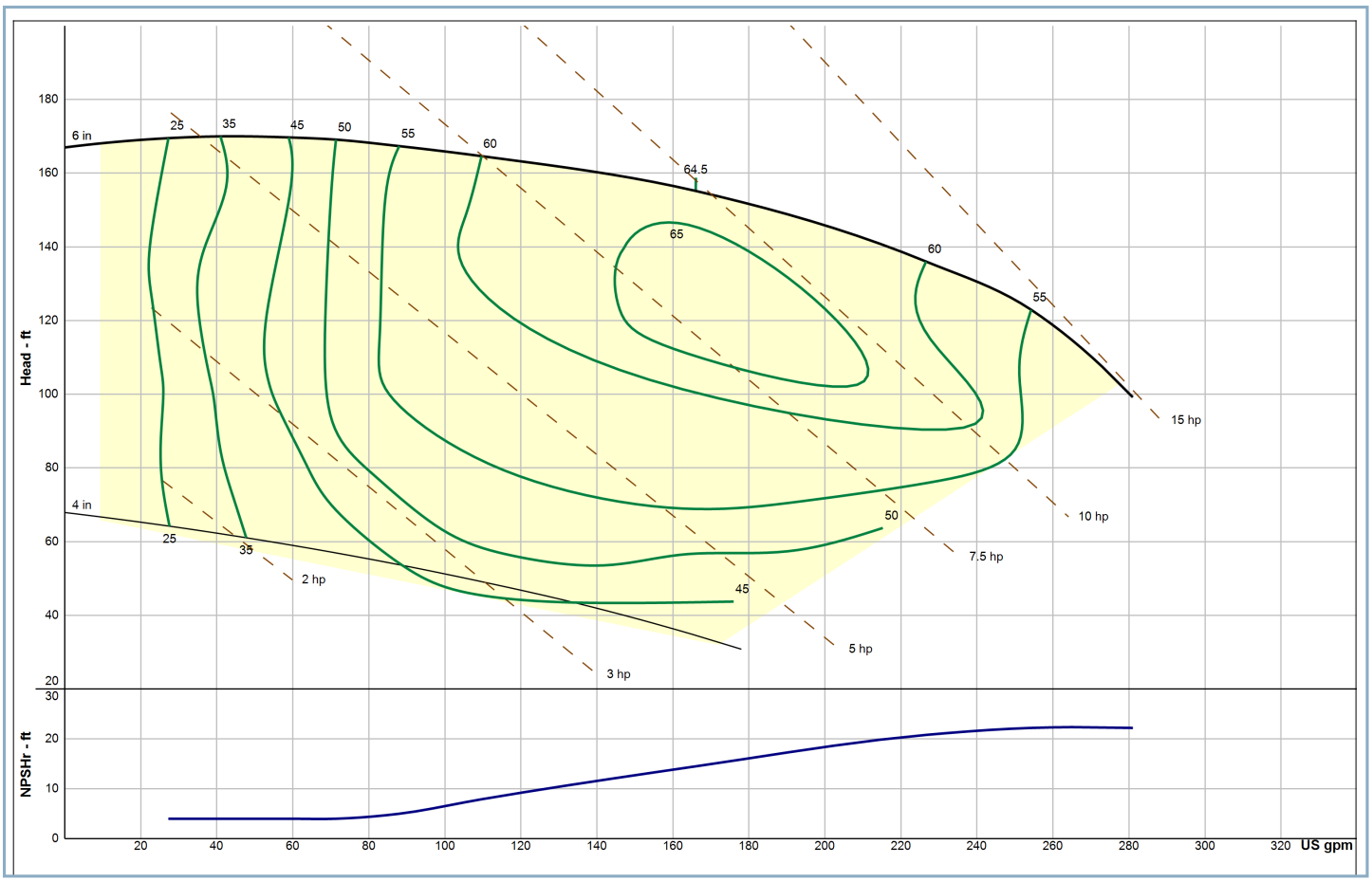

Viscosity and Specific Gravity Table

Product	Specific Gravity	Viscosity
Acetic Acid		
5%	1.01	
10%	1.01	31.7 SSU @ 59°F
50%	1.06	33.0 SSU @ 59°F
80%	1.08	35.0 SSU @ 59°F
Animal Fat	0.9	130 SSU @ 115°F
		50 SSU @ 200°F
Barbecue Sauce	1.05	11,500 SSU @ 40-75°F
Beer	1.02	32 SSU @ 68°F
Blood - Animal	0.93-0.98	15,000 SSU @ 55°F
Butter	0.93-0.98	15,000 SSU @ 55°F
		440 SSU @ 90°F
		220 SSU @ 115°F
Coconut Oil	0.92	125 SSU @ 106°F
Corn Oil	0.92	135 SSU @ 130°F
		54 SSU @ 212°F
Corn Starch Solutions		
22 Baume	1.18	150 SSU @ 70°F
		130 SSU @ 100°F
24 Baume	1.2	600 SSU @ 70°F
		440 SSU @ 100°F
25 Baume	1.21	1400 SSU @ 70°F
		800 SSU @ 100°F
Cottage Cheese	1.02	4,300 SSU
Cream (sweet)	1	73 SSU
	0.99	140 SSU
	0.99	215 SSU
Egg Yolk	1.12	21,500 SSU @ 35°F
Gelatin	1.01	1,380-2,580 SSU @ 160°F
Glucose	1.35 - 1.44	35M-100M SSU @ 100°F
		4M-11M SSU @ 150°F
Honey	1.3	1250-1425 SSU @ 100°F
Ice Cream Mix	1.15	1050 SSU @ 46°F
Lard	0.96	287 SSU @ 100°F
Linseed Oil	0.92 - 0.94	143 SSU @ 100°F
		93 SSU @ 130°F
Malt Syrup	1.41	85,400 SSU @ 77°F
Maple Syrup	1.37	2,000 SSU @ 68°F
Margarine	0.93	13,900 SSU @ 84°F
Milk	1.02 - 1.05	31.5 SSU @ 68°F
Molasses		
A. First	1.4 - 1.46	1,300 - 23,500 SSU @ 100°F
		700 - 8,160 SSU @ 130°F
B. Second	1.43 - 1.48	6,536 - 61,180 SSU @ 100°F
		3058 - 15,294 SSU @ 130°F
C. Blackstrap	1.46 - 1.49	12,190 - 23,500 SSU @ 100°F
Mustard	1	17,000 SSU @ 85°F
Olive Oil	0.91 - 0.92	200 SSU @ 100°F
Peanut Butter	1.2	77,400 SSU @ 110-140°F
Sesame Seed Oil	0.92	184 SSU @ 100°F
		110 SSU @ 130°F
Soy Bean Oil	0.91	500 SSU @ 44°F
Tomato Paste	1.14	60M-80M SSU
		21M SSU Approx.
Water	1	31 SSU @ 68°F

Parts List

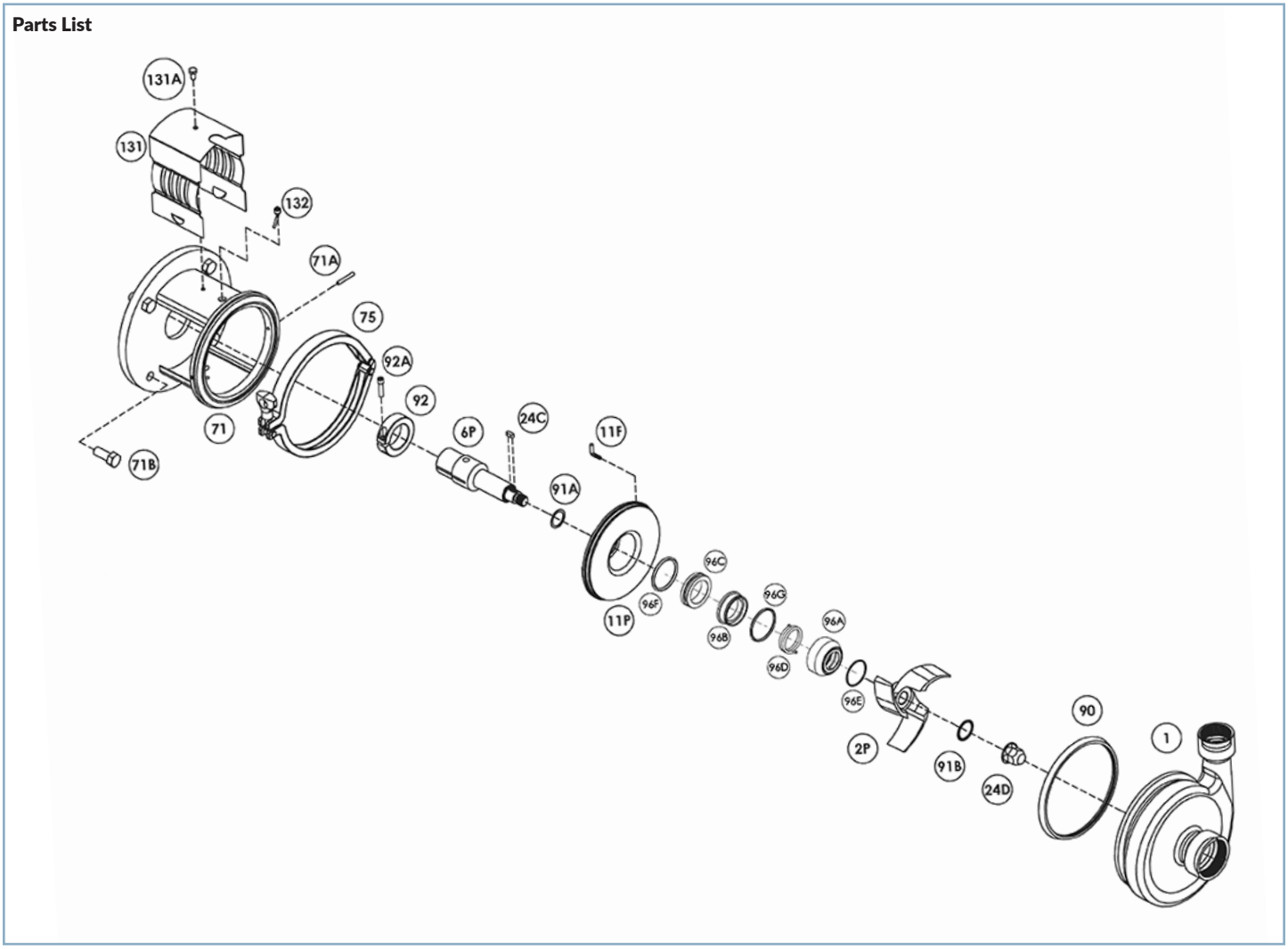

Part #	Part Name
1.	Casing
2P.	Impeller
6P.	Stub shaft
11P.	Backplate
11F.	Backplate pin
24C.	Impeller key
24D.	Impeller nut
71.	Adapter
71A.	Adapter pin
71B.	Adapter mounting screws
75.	Tri-Clamp

Part #	Part Name
90.	Casing gasket
91A.	Impeller back gasket
91B.	Impeller nut gasket
92.	Shaft collar
92A.	Bolt drive collar
96A.	Rotary holder
96B.	Internal rotary face
96C.	Static face
96D.	Internal rotary spring
96E.	Rotary holder O-ring
96F.	Static face back O-ring

Part #	Part Name
96G.	Internal rotary face O-ring
131.	Seal guard assembly
131A.	Set screw
132.	Water cascade assembly